보낸 사람: **Alex Demarais** Alex.Demarais@dtpjv.com
제목: RE: Communication System_Woojin PTT Software Simulation
날짜: 2016년 2월 23일 09:04
받는 사람: J. S. Jeong (정준석) jsjeong@wjis.co.kr, Fauvelle, Robert Robert.Fauvelle@snclavalin.com, 김 인천 ickim@hyundai-rotem.co.kr, Leo Jeon staranswer@hyundai-rotem.co.kr
참조: 최 철한 chchoi@hyundai-rotem.co.kr, 신 광균 kkshin@hyundai-rotem.co.kr, 이 선엽 sy.lee@hyundai-rotem.co.kr, 장 덕수 dsjang@wjis.co.kr, 이 재영 jylee@wjis.co.kr, 전 병진 bjjone@wjis.co.kr, Peter Strange Peter.Strange@dtpjv.com, 박 성민 psmwin@hyundai-rotem.co.kr, 김 오현 ohkim@hyundai-rotem.co.kr, 김 상현 jsk@wjisamerica.com

AD

Dear All,

Thank you for joining tonight's conference call, please see below summary. **The next call will be next Tuesday 3/1/16 at 4 pm MST.**

1. Software Status
   - Woojin will begin installing the final software fleet wide today and finish in about a week pending car availability

2. Hardware PTT Schedule and Status
   - Woojin expects to receive prototype button from their supplier this week
     i. Woojin to provide status of internal lab testing this Friday 2/26/16
   - If all goes well, the prototype button may be delivered to Denver as early as next week
   - Laptop with Woojin PTT software will be provided to DTS on Friday 2/26/16

3. Master Key update
   - DTS proposes to install a timer relay to "latch" the CRA as Master through VCC rather than a communication system software change after the master controller key switch has been moved to the OFF position.
   - The CRA will remain as Master for 90 minutes (length of emergency time) or until another master controller key switch is moved away from the OFF position (CLOR contact).
   - Only impact to Woojin system is that the Master/Slave relationship changes almost instantaneously, should not require any change to the Woojin hardware or software.
   - See attached diagram for wiring details

Warm Regards,

Alex Demarais

Office 303.861.6930
Cell 720.988.0475

From: J. S. Jeong (정준석) [mailto:jsjeong@wjis.co.kr]
Sent: Wednesday, February 17, 2016 7:50 AM
To: Alex Demarais; 'Fauvelle, Robert'; '김 인천'; '김 상현'
Cc: '최 철한'; '신 광균'; '이 선엽'; '장 덕수'; '이 재영'; '전 병진'; Peter Strange; '박 성민'; 'Leo Jeon'; '김 오현'
Subject: RE: Communication System_Woojin PTT Software Simulation

Team,

I found below message didn't contain enough details to describe what exactly the plan is. Please find the attached document for more clear picture.

Ps) Please understand that the document does not have a document number at this time. I will resend it as soon as I get the appropriate document number assigned.

Thanks,
J. S. Jeong
Woojin Industrial Systems Co., Ltd.
Systems Engineer/Integrator
Product Design Team 2, R&D Center
+82 43 820 4292
jsjeong@wjis.co.kr

From: J. S. Jeong (정준석) [mailto:jsjeong@wjis.co.kr]
Sent: Wednesday, February 17, 2016 3:50 PM
To: 'Alex Demarais'; 'Fauvelle, Robert'; '김 인천'; '김 상현'
Cc: '최 철한'; '신 광균'; '이 선엽'; '장 덕수'; '이 재영'; '전 병진'; 'Peter Strange'; '박 성민'; 'Leo Jeon'; '김 오현'
Subject: RE: Communication System_Woojin PTT Software Simulation

Hello all,

Below is Woojin's proposed contingency plan to obtain the OCC~PEI interface in a timely manner:

- To test Windows based tablet with PTT software by 3/1
- To test final PTT controller with actual pushbutton by 3/10

Proposed Windows based tablet: http://shop.lenovo.com/us/en/tablets/lenovo/yoga-tablet-series/yoga-tablet-2-win-8/#tab-tech_specs
Please let me know if you have any other questions.

Thanks,
J. S. Jeong
Woojin Industrial Systems Co., Ltd.
Systems Engineer/Integrator
Product Design Team 2, R&D Center
+82 43 820 4292
jsjeong@wjis.co.kr

From: J. S. Jeong (정준석) [mailto:jsjeong@wjis.co.kr]
Sent: Wednesday, February 17, 2016 1:24 PM
To: 'Alex Demarais'; 'Fauvelle, Robert'; '김 인천'; '김 상현'
Cc: '최 철한'; '신 광균'; '이 선엽'; '장 덕수'; '이 재영'; '전 병진'; 'Peter Strange'; '박 성민'; 'Leo Jeon'; '김 오현'
Subject: RE: Communication System_Woojin PTT Software Simulation

Hi Alex,

Thanks for your summary.
For clarification, possible Windows based tablet PC option is estimated 2 weeks, not 1 week.
I apologize if there was any confusion during the conference call.

Thanks,
J. S. Jeong
Woojin Industrial Systems Co., Ltd.
Systems Engineer/Integrator
Product Design Team 2, R&D Center
+82 43 820 4292
jsjeong@wjis.co.kr

From: Alex Demarais [mailto:Alex.Demarais@dtpjv.com]
Sent: Wednesday, February 17, 2016 11:13 AM
To: Fauvelle, Robert; 정 준석; 김 인천; 김 상현
Cc: 최 철한; 신 광균; 이 선엽; 장 덕수; 이 재영; 전 병진; Peter Strange; 박 성민; Leo Jeon; 김 오현
Subject: RE: Communication System_Woojin PTT Software Simulation

Dear All,

Thank you for joining tonight's conference call, please see below summary. **The next call will be 2/22/16 at 4 pm.**

1. Hardware PTT Schedule and Status
   - Woojin estimated schedules for 3 potential options to trigger PTT in OCC:
     i. Original hardware PTT box → 3 weeks
     ii. Windows Based Tablet Computer with a soft button → 1 week
     iii. Use a laptop with the same software from the Simulation → Now
   - Onboard software that was tested on the car 2 weeks ago is final, still needs to be uploaded on fleet
   - Technical description & hard schedule for each option proposal by COB Korea today

2. Master Key update and quotation
   - Not investigated yet, major effort to review SW protocol for entire system

Warm Regards,

Alex Demarais

Office 303.861.6930
Cell 720.988.0475

From: Alex Demarais
Sent: Thursday, February 04, 2016 5:27 PM
To: 'Leo Jeon'; 'Fauvelle, Robert'; '정 준석'; '김 오현'; '김 인천'
Cc: '최 철한'; '신 광균'; '이 선엽'; '장 덕수'; '이 재영'; '전 병진'; '김 상현'; Peter Strange; '박 성민'
Subject: RE: Communication System_Woojin PTT Software Simulation

Dear All

Dear All,

Thank you for joining today's conference call. **The next call will be 2/15/16 at 4 pm.**

Please see below summary:

1. Software Simulation Tests:
   - Successfully completed on 2/3/15, both over the WiMAX network and local train network
   - Echo heard on the OCC phone → Check with Avaya
   - Low Volume from the train, Woojin made some modifications and raised the volume

2. Technical Qs
   - Woojin to investigate what happens if 2 PEIs on the same train consist try to call the OCC at the same time?
     - 2nd PEI cannot connect to OCC without DPO picking up
     - DPO has to pick up the 2nd PEI call in order to make a party line to connect
   - Woojin to investigate whether DPO or OCC has PTT priority once both have joined the conversation.
     - Should be tested via a software simulation
   - Woojin to investigate what would happen if 2 PEIs from 2 different train consists call the OCC at the same time.
     - The 2nd VOIP calls the AVAYA system, but the 2nd CNCS does not call the PPT button
     - Woojin will provide 5 PTT buttons with 5 IP addresses, but they all make 1 connection to 1 car
     - DTS will discuss with AVAYA what the best option will be to prevent confusion if a 2nd train calls

3. Hardware
   - Woojin to provide a date

4. Commercial Issues
   - To be finalized between Woojin and Rotem management

All technical discussion is strictly for 1 PEI button to 1 PTT button in the OCC. Any further software development must be first cleared by DTS, Rotem and Woojin upper management

새해 복 많이 받으세요,

Alex Demarais

Office 303.861.6930
Cell 720.988.0475

From: Alex Demarais
Sent: Thursday, February 04, 2016 4:18 PM
To: 'Leo Jeon'; 'Fauvelle, Robert'; '정 준석'
Cc: '김 인천'; '김 오현'; '최 철한'; '신 광균'; '이 선엽'; '장 덕수'; '이 재영'; '전 병진'; '김 상현'; Peter Strange; '박 성민'
Subject: RE: Communication System_Woojin PTT Software Simulation

Dear Leo and JS,

Are either of you planning to join the conference call?

Thank you,

Alex Demarais

Office 303.861.6930
Cell 720.988.0475

From: Alex Demarais
Sent: Wednesday, February 03, 2016 10:01 PM
To: 'Leo Jeon'; 'Fauvelle, Robert'
Cc: '김 인천'; '김 오현'; '최 철한'; '신 광균'; '이 선엽'; '정 준석'; '장 덕수'; '이 재영'; '전 병진'; '김 상현'; Peter Strange; '박 성민'
Subject: RE: Communication System_Woojin PTT Software Simulation

Dear Leo,

Thank you and the Woojin team for staying late tonight to demonstrate both tests #1 and #2 successfully.

I look forward to discussing the next steps together during tomorrow's meeting.

Warm Regards,

Alex Demarais

Office 303.861.6930
Cell 720.988.0475

From: Alex Demarais
Sent: Wednesday, February 03, 2016 8:39 AM
To: 'Leo Jeon'; Fauvelle, Robert
Cc: 김 인천; 김 오현; 최 철한; 신 광균; 이 선엽; 정 준석; 장 덕수; 이 재영; 전 병진; 김 상현; Peter Strange; 박 성민
Subject: RE: Communication System_Woojin PTT Software Simulation

Dear Leo,

Please let me know when test #1 is successful.

If both married pairs 4009/10 & 4041/42 are WiMAX ready as Mr. Park and Xorail confirmed, it should not matter to have them coupled together. Ping test may not work from on-board laptop (10.40.42.205) to Avaya VoIP Server (10.156.1.11), because the WiMAX network is configured to transfer data from the VOIP box (10.40.42.199) to the Avaya VoIP Server (10.156.1.11). This should not affect test #1 because the laptop only needs to connect to the CNCS locally on the train.

Thank you,

Alex Demarais

Office 303.861.6930
Cell 720.988.0475

From: Leo Jeon [mailto:staranswer@hyundai-rotem.co.kr]
Sent: Tuesday, February 02, 2016 6:38 PM
To: Alex Demarais; Fauvelle, Robert
Cc: 김 인천; 김 오현; 최 철한; 신 광균; 이 선엽; 정 준석; 장 덕수; 이 재영; 전 병진; 김 상현; Peter Strange; 박 성민
Subject: RE: Communication System_Woojin PTT Software Simulation
Importance: High

Dear Alex,

We will try to perform the simulation test both cars 4041/42 and 4009/10 coupled together because the COMM static test should be also performed at that time.
In my opinion, if the simulation test cannot be performed under 2 MP, then we have to perform the simulation test under single MP condition.
As I send SMS via Kaka-o-talk to you, I am performing the simulation test the test step #1 now with OCC.
I am performing to talk and listen from PEI (Woojin member) to OCC (me) on tonight.

Again, we have to perform the simulation test with OCC as Test Step #2 on tomorrow.
And, 4041/42 cars should be available for the WiMax communication per Mr. Park message. (refer to the attached)
But, now 4021/42 cars are failed to ping test from the on-board laptop (10.40.42.205) to Avaya VoIP Server. (10.156.1.11)
I am not sure why the above ping test is failure.
The above concern is reason for the performing of the simulation test under single MP condition.

Regards,
Leo

IDEA QI A New Era of Quality

전윤수 Jeon Yoonsoo
전장품개발팀 I 책임연구원
Electric Equipment Development Team I Principal Researcher

Hyundai Rotem Company
T 031-596-9396 M 010-3683-7520
staranswer@hyundai-rotem.co.kr

상기 메일은 지정된 수신인만을 위해 발송되는 것으로서 보안을 유지해야 하는 정보 및 관련 법령에 따라 보호되는 영업비밀 등을 포함하고 있을 수 있습니다. 본 메일에 포함된 정보를 권한 없이 보유, 전송, 공개, 배포, 복사 또는 사용하는 것은 엄격하게 금지되어 있습니다. 만약 귀

하가 지정된 수신인이 아닌 경우 회신메일로 발신자에게 연락하여 주시고, 원본 및 사본과 첨부 문서를 모두 삭제하여 주시기 바랍니다. 협조하여 주셔서 감사합니다.

The above message is intended solely for the named addresses and may contain trade secret or privileged and confidential information otherwise protected under applicable law. Any unauthorized dissemination, distribution, copying or use of the information contained in this e-mail is strictly prohibited. If you have received this e-mail in error, please immediately notify the sender by e-mail and destroy any and all electronic or other copies of the original message and attachments. Thank you for your cooperation.

From: Alex Demarais [mailto:Alex.Demarais@dtpjv.com]
Sent: Wednesday, February 03, 2016 9:55 AM
To: Leo Jeon; Fauvelle, Robert
Cc: 김 인천; 김 오현; 최 철한; 신 광균; 이 선엽; 정 준석; 장 덕수; 이 재영; 전 병진; 김 상현; Peter Strange; 박 성민
Subject: RE: Communication System_Woojin PTT Software Simulation

Dear Leo,

I do not understand your concern to perform the test using both cars 4041/42 and 4009/10 coupled together. Are you concerned one of these pairs might have a WiMAX or Trainline issue?

Please arrange the simulation Test #1 sometime during the day tomorrow by calling the OCC dispatcher line (720) 460-5908. Just explain to the dispatcher you are testing the PEI system and to pick up their emergency telephone when it rings.

If you have issues with test #1 please feel free to call me. I will plan to be at the CRMF in the late afternoon/evening for Test #2 with Xorail.

Thank you,

Alex Demarais

Office 303.861.6930
Cell 720.988.0475

From: Leo Jeon [mailto:staranswer@hyundai-rotem.co.kr]
Sent: Tuesday, February 02, 2016 5:08 PM
To: Alex Demarais; Fauvelle, Robert
Cc: 김 인천; 김 오현; 최 철한; 신 광균; 이 선엽; 정 준석; 장 덕수; 이 재영; 전 병진; 김 상현; Peter Strange; 박 성민
Subject: RE: Communication System_Woojin PTT Software Simulation

Alex,

Noted.
We will install the preliminary software for the simulation test to 4041/42 or 4009/10.
But, I am not sure that the above cars can be performed the simulation test with multiple married pairs.
Because, the simulation test should be performed together with the static COMM test under multiple condition.
If both 4041/42 and 4009/10 cars are not normal operated, then the simulation test should be performed under single married pair.
Please arrange the simulation test on tomorrow in order to save the time.

Regards,
Leo

IDEA QI A New Era of Quality

전윤수 Jeon Yoonsoo
전장품개발팀 I 책임연구원
Electric Equipment Development Team I Principal Researcher

Hyundai Rotem Company
T 031-596-9396 M 010-3683-7520
staranswer@hyundai-rotem.co.kr

상기 메일은 지정된 수신인만을 위해 발송되는 것으로서 보안을 유지해야 하는 정보 및 관련 법령에 따라 보호되는 영업비밀 등을 포함하고 있을 수 있습니다. 본 메일에 포함된 정보를 권한 없이 보유, 전송, 공개, 배포, 복사 또는 사용하는 것은 엄격하게 금지되어 있습니다. 만약 귀하가 지정된 수신인이 아닌 경우 회신메일로 발신자에게 연락하여 주시고, 원본 및 사본과 첨부 문서를 모두 삭제하여 주시기 바랍니다. 협조하여 주셔서 감사합니다.

The above message is intended solely for the named addresses and may contain trade secret or privileged and confidential information otherwise protected under applicable law. Any unauthorized dissemination, distribution, copying or use of the information contained in this e-mail is strictly prohibited. If you have received this e-mail in error, please immediately notify the sender by e-mail and destroy any and all electronic or other copies of the original message and attachments. Thank you for your cooperation.

From: Alex Demarais [mailto:Alex.Demarais@dtpjv.com]
Sent: Wednesday, February 03, 2016 7:26 AM
To: Leo Jeon; Fauvelle, Robert
Cc: 김 인천; 김 오현; 최 철한; 신 광균; 이 선엽; 정 준석; 장 덕수; 이 재영; 전 병진; 김 상현; Peter Strange; 박 성민

Cc: 김 민선; 김 오현; 최 철환; 신 정균; 이 신섭; 정 준석; 정 득우; 이 재정; 신 정선; 김 정현; Peter Strange; 박정민 (psmwin@hyundai-rotem.co.kr)
Subject: RE: Communication System_Woojin PTT Software Simulation

Dear Leo,

Which car did you install the CNCS software on, is the car "WiMAX ready"?

For clarification please see my updated information & diagrams.

The required setup is as follows:

1. Finish testing PTT soft button at Woojin Lab in KR → **COMPLETED**
2. Install software on Rotem/Woojin laptop in Denver → **COMPLETED**
3. Upgrade the CNCS software onboard a "WiMAX Ready" car in Denver→ **COMPLETED**

The required tests are as follows:

1. Simulation test #1 - Demonstrate the PTT software simulation from a laptop connected to the trainline network → **WOOJIN can complete today internally, tomorrow witness**
   - LAPTOP with WOOJIN SW - IP Address: 10.40.XX.205
   - LAPTOP with WOOJIN SW - Gateway IP Address: 10.40.XX.201
   - CNCS onboard - IP Address: 10.40.XX.200
   - CNCS onboard - Gateway: 10.40.XX.201
   - Subnet Mask: 255.255.255.0

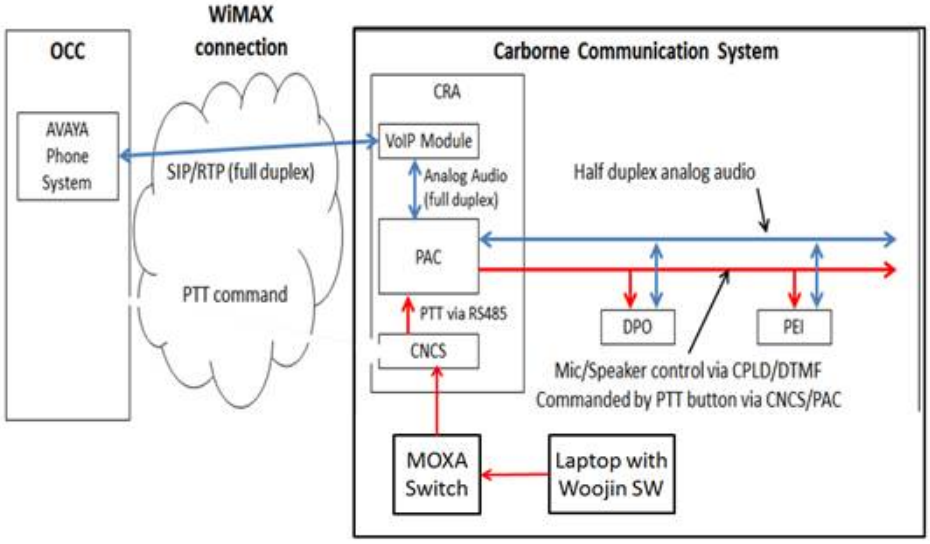

2. Simulation test #2 - Demonstrate the PTT software simulation from a laptop connected to the OCC network → **WOOJIN can complete tomorrow**
   - LAPTOP with WOOJIN SW - IP Address: 10.40.XX.205
   - LAPTOP with WOOJIN SW - Gateway IP Address: 10.40.XX.201
   - SUBNET 255.255.255.0
   - IP Address of laptop: 10.159.1.200
   - Gateway IP Address: 10.40.1.1

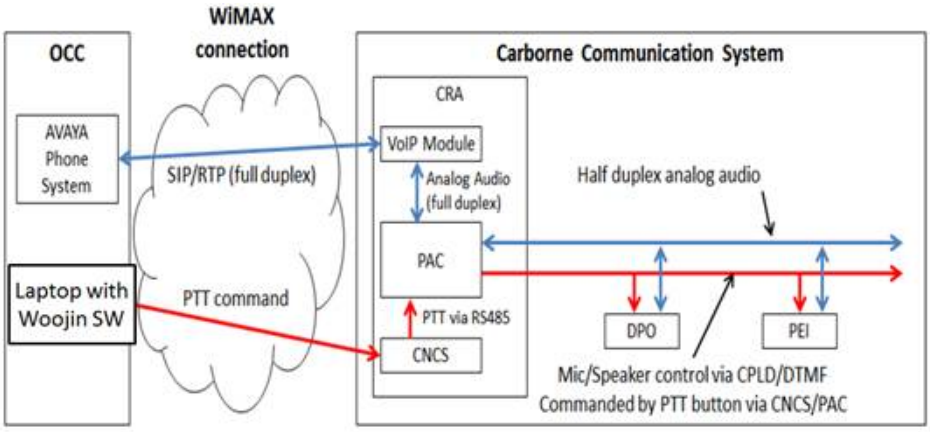

The simulation test #1 will be performed locally on the onboard network, simulation test #2 will be performed in the OCC. This will help narrow down any troubleshooting issues. Please preform your internal local onboard test #1 today, and inform Bob when you are ready for him to witness test #1 tomorrow morning. If test #1 passes, then I will come to the CRMF for test #2 tomorrow night. I have informed Xorail that you will be ready for test #2 tomorrow night.

Thank you,

Alex Demarais

Office 303.861.6930
Cell 720.988.0475

From: Leo Jeon [mailto:staranswer@hyundai-rotem.co.kr]
Sent: Tuesday, February 02, 2016 2:47 PM
To: Alex Demarais; Fauvelle, Robert
Cc: 김 인천; 김 오현; 최 철한; 신 광균; 이 선엽; 정 준석; 장 덕수; 이 재영; 전 병진; 김 상현; Peter Strange
Subject: RE: Communication System_Woojin PTT Software Simulation
Importance: High

Alex,

As I sent the e-mail message, we had the preliminary software of the simulation test for PEI to OCC PTT function.
We would like to perform the internal test on today (2/2) at CRMF.
And, we should perform the simulation test on this Wednesday.
Woojin members have to leave on this Thursday due to their flight schedule.

And, I think that you misunderstood to the proposed simulation test and some missed information.
Please see the below our comments (red color) for your information.

1. Demonstrate the PTT software simulation from a laptop connected to the trainline network
   - IP Address of laptop: 10.40.XX.205 → For on-board system, this should be CNCS of CRA, not laptop. So, this IP address must be 10.40.XX.200.
   - Gateway IP Address: 10.40.XX.201
     (where XX is the car number)
   - What is the information of the Subnet Mask, it should be 255.255.255.0, am I correct?
2. Demonstrate the PTT software simulation from a laptop connected to the OCC network
   - IP Address of laptop: 10.159.1.200
   - Gateway IP Address: 10.40.1.1
   - What is the information of the Subnet Mask?

Regards,
Leo

IDEA QI A New Era of Quality

전윤수 Jeon Yoonsoo
전장품개발팀 I 책임연구원
Electric Equipment Development Team I Principal Researcher

Hyundai Rotem Company
T 031-596-9396 M 010-3683-7520
staranswer@hyundai-rotem.co.kr

상기 메일은 지정된 수신인만을 위해 발송되는 것으로서 보안을 유지해야 하는 정보 및 관련 법령에 따라 보호되는 영업비밀 등을 포함하고 있을 수 있습니다. 본 메일에 포함된 정보를 권한 없이 보유, 전송, 공개, 배포, 복사 또는 사용하는 것은 엄격하게 금지되어 있습니다. 만약 귀하가 지정된 수신인이 아닌 경우 회신메일로 발신자에게 연락하여 주시고, 원본 및 사본과 첨부 문서를 모두 삭제하여 주시기 바랍니다. 협조하여 주셔서 감사합니다.

The above message is intended solely for the named addresses and may contain trade secret or privileged and confidential information otherwise protected under applicable law. Any unauthorized dissemination, distribution, copying or use of the information contained in this e-mail is strictly prohibited. If you have received this e-mail in error, please immediately notify the sender by e-mail and destroy any and all electronic or other copies of the original message and attachments. Thank you for your cooperation.

From: Alex Demarais [mailto:Alex.Demarais@dtpjv.com]
Sent: Wednesday, February 03, 2016 6:21 AM
To: 'Leo Jeon'
Cc: 'Fauvelle, Robert'; '김 인천'; '김 오현'; '최 철한'; '신 광균'; '이 선엽'; '장 덕수'; '이 재영'; '김 상현'; Peter Strange; 정 준석 (jsjeong@wjis.co.kr)
Subject: Communication System_Woojin PTT Software Simulation

Dear Leo

Dear Leo,

Are we still on track to perform the PTT software simulation test for this Thursday (2/4) in Denver?

The required setup is as follows:

1. Finish testing PTT soft button at Woojin Lab in KR
2. Install software on Rotem/Woojin laptop in Denver
3. Upgrade the CNCS software onboard a “WiMAX Ready” car in Denver

The required tests are as follows:

1. Demonstrate the PTT software simulation from a laptop connected to the trainline network
   - IP Address of laptop: 10.40.XX.205
   - Gateway IP Address: 10.40.XX.201
     (where XX is the car number)
2. Demonstrate the PTT software simulation from a laptop connected to the OCC network
   - IP Address of laptop: 10.159.1.200
   - Gateway IP Address: 10.40.1.1

Please confirm when all the setup work will be complete so that we can schedule the two phases of testing.

Thank you,
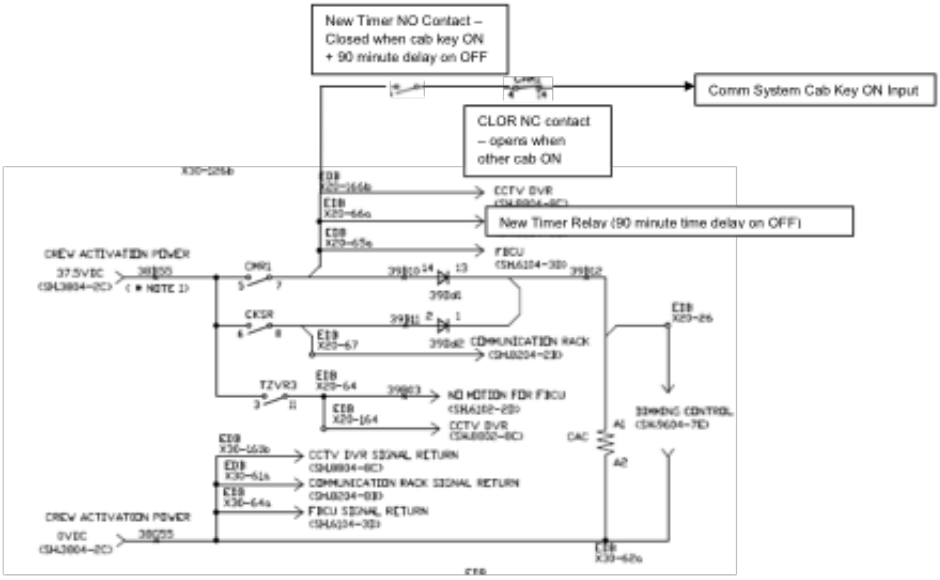
Alex Demarais | **Denver Transit Partners** | Integration Testing & Verification Manager | Alex.Demarais@dtpjv.com | Broadway Office 303.861.6930 Cell 720.988.0475